Appendix 4.5.1
Special Considerations for the Development of Mechanical Device Prototypes

Mechanical engineering prototypes are three-dimensional objects made out of metal, plastics, or other physical materials using common manufacturing processes. Typically, mechanical engineers (and/or mechanical engineering principles) play an important role in the development of these prototypes, which are often made in machine shops or product realization laboratories.

Mechanical engineering prototyping begins with design drawing. When thinking about mechanical engineering solutions, innovators should not commit to any single feature or combination of features until they begin to put their ideas down on paper. In this way, abstract thinking and quick sketching creates a creative stage of the prototyping process with numerous ideas and concepts. It is also the least expensive, so innovators should be encouraged to spend plenty of time considering a breadth of different alternatives and then narrowing down the list of potential approaches before they invest time in detailed design drawings or CAD models.

Innovators use two-dimensional design drawing to initiate the process of formalizing an idea. A design allows them to represent a concept and communicate it to others in a more concrete (rather than abstract) manner. In this way, drawing serves as a bridge from concept to prototype. Too often, innovators hesitate to draw their ideas because they worry about their drawing skills. However, especially early in the design process, it is not important for the drawings to be exact. Rough sketches, no matter how imprecise, can be a powerful tool for communicating an idea, identifying potential issues, and stimulating new possibilities.

The most common types of design drawings used in mechanical engineering are isometric drawings, cross-sectional drawings, assembly drawings, orthographic projection, and computer-aided design (CAD). At a high level, drawings are often created in a sequence, as shown below.
In this example, the drawings show different views of a single-valve, one-way syringe.

Isometric drawing (or projection) is a method of visually representing three-dimensional objects in two dimensions, such as on a piece of paper or computer screen. The true height of the object is drawn along a vertical line and the width and depth of the object are drawn at a 30-degree angle relative to the horizontal plane such that the three coordinate axes appear equally foreshortened, creating the three-dimensional appearance (see Figure 4.5.1-1).

Figure 4.5.1-1 – An isometric view of a syringe concept (courtesy of Craig Milroy).

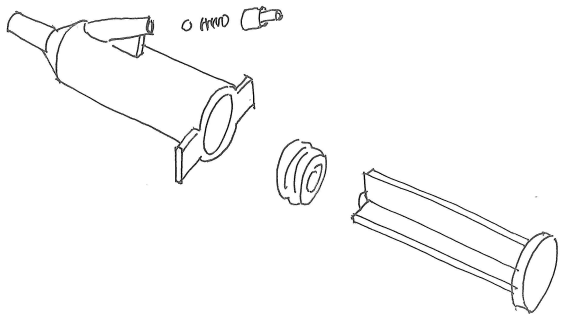

Assembly drawings, or layout drawings, show the number of parts in a device, how they are sized with respect to one another, and how they fit together into a complete assembly. This provides a general rendition or blueprint of the concept that can later be used as the basis of more detailed drawings for each component. A cross-sectional drawing can be used to show internal or hidden components by cutting away a portion of the object, as in (see Figure 4.5.1-2). Diagonal lines (cross-hatches) can be used to show regions where materials have been cut to distinguish between material and space.[i]

Figure 4.5.1-2 – A cross-sectional view of a syringe (courtesy of Craig Milroy).

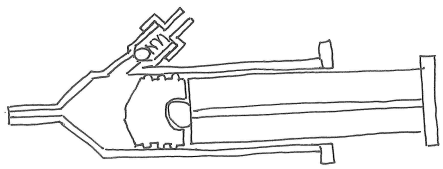

Orthographic projection is a method that provides multiple views of the same object (top view, front view, right view, etc.) to fully describe the objet and reveal unique details that cannot be seen in a single view. As shown in Figure 4.5.1-3, a left view, front view, right view, and section view are used to describe the syringe tip. The number and type of views used to describe an object will vary with complexity and additional views should be added until the part is fully described.

Figure 4.5.1-3 – An orthographic projection of a syringe concept (courtesy of Craig Milroy).

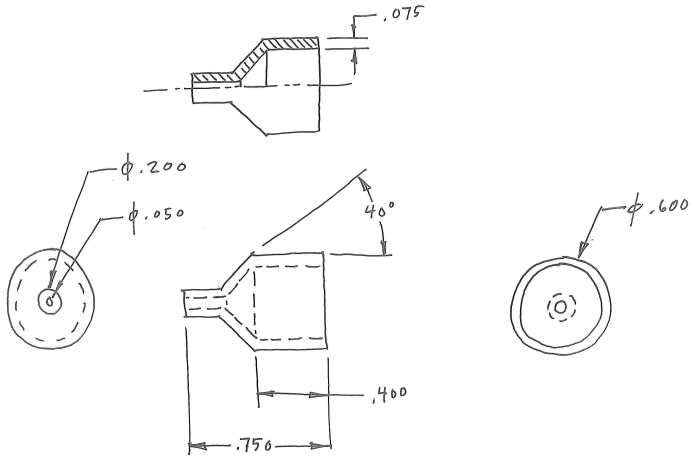

CAD drawings can be made by using a wide range of computer-based tools (e.g., SolidWorks, Solid Edge). CAD drawings are especially useful in early design work and prototyping—both as a way to communicate ideas about design and intended functions, but also to communicate with the machinists, shops, and vendors that will contribute to the prototyping effort. While CAD mainly has been used for detailed engineering of three-dimensional models and/or two-dimensional drawings of physical components, it is also employed throughout the engineering process from conceptual design and layout of products, through strength and dynamic analysis of assemblies, to definition of manufacturing methods of components (see Figure 4.5.1-4).

Figure 4.5.1-4 – A CAD drawing of a syringe concept (courtesy of Craig Milroy).

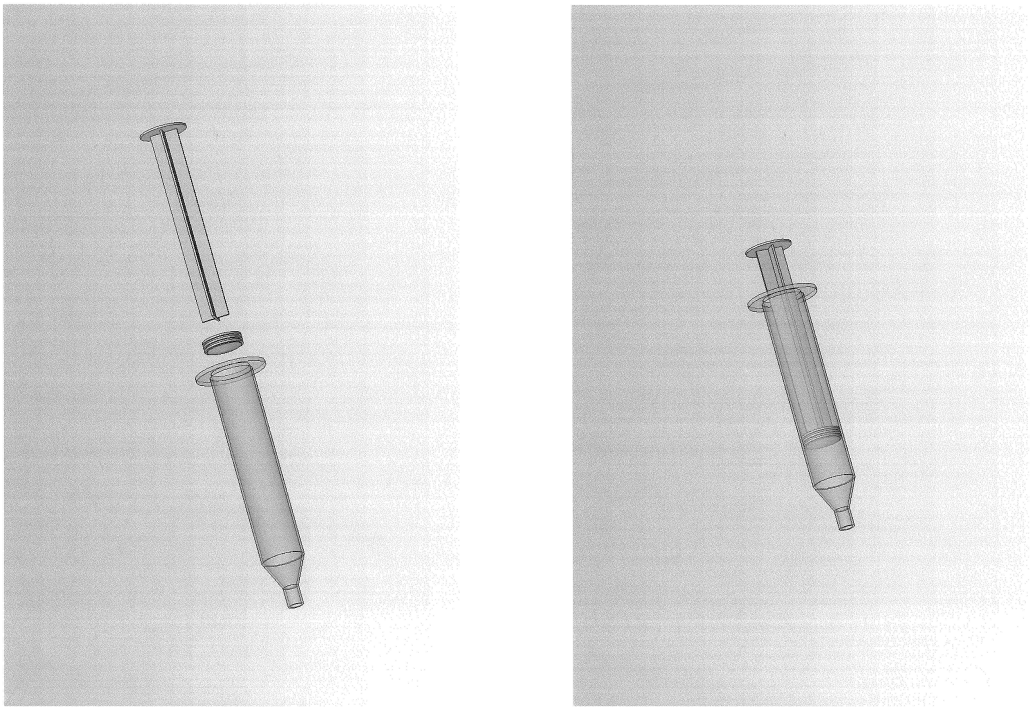

With the advent of lower cost and more widely accessible three-dimensional (3D) printing technologies, employing CAD early in design and development can be an efficient approach. This is because CAD files are typically used to drive 3D printing machines to generate three-dimensional prototypes, which can be used for a wide variety of purposes from design articulation, to gathering user feedback, to actual bench and tissue testing. CAD offers many benefits, including lower product development costs and greatly shortened design cycles (because designers can lay out and develop their work on screen, print it out, and save it for future editing rather than having to create drawings from scratch).

Note that mechanical prototyping and design drawing are not linear, mutually exclusive activities. Mechanical prototypes can be constructed to discover new information that

should then be taken into account within the design. Similarly, as the prototypes become more advanced, more detailed drawings can be created that allow for certain models to be replicated, as required by the innovator.

When developing mechanical prototypes, innovators are encouraged to start with materials that are inexpensive and easy to work with, such as foam, clay, or wood, before investing in the use of specialized or more complicated materials. Even if the finished product is never be made of these simple materials, innovators can explore issues related to the size, shape, and other dimensions of the device using nothing more than simple tools to create the models.

3D printed prototypes offer entirely new opportunities for efficiently creating models. 3D printing, also called “additive manufacturing,” is an umbrella term that refers to multiple processes, including Stereolithography (SLA), Fused Deposition Modeling (FDM), Selective Laser Sintering (SLS), and many more. With this technique, three-dimensional solid objects are made from a digital model by laying down successive layers of material (see Figure 4.5.1-5). In this way, 3D printing is considered an additive process (whereas traditional machining techniques that primarily depend on the removal of material by drilling, cutting etc. are subtractive).[ii] Keep in mind that the output of a 3D printer is only as good as the model it is based on, so becoming proficient at digital modeling techniques is important. Additionally, each type of 3D printing has different limits on resolution, material, surface finish, and post-processing, and the capabilities of 3D printers vary significantly. Innovator must consider these constraints, and the trade-offs they necessitate, relative to the goals of each prototype.

Figure 4.5.1-5 – A part created using the FDM approach to 3D printing (courtesy of Prescient Surgical).

"Hobbyist" 3D printers are more affordable but have clear boundaries on the complexity and resolution of the output they can produce. Commercial-grade printers have significantly more advanced capabilities, but are much more expensive. However, only in certain situations would purchasing a commercial-grade 3D printer be more cost efficient than outsourcing the work to a third-party; for example, if 3D printing is central to the design of a part or prototype and the team needs to be able to rapidly produce multiple iterations through an in-house print > assess > redesign > print cycle (see Figure 4.5.1-6). Innovators must remember, though, that 3D printing is in its infancy for use in large-scale manufacturing due, in part, to the time it takes and its cost. Accordingly, they are well-served to think about how a 3D printed part eventually could be manufactured by conventional means (e.g., injection molding, forging, milling) as prototyping progresses.

Figure 4.5.1-6 – A team using a 3D printer for prototyping (courtesy of Singapore Stanford Biodesign).

Once issues that can be solved using simple mechanical models have been worked out, innovators will have amassed some experience in creating prototypes (in addition to resolving certain design considerations) and will be able to apply these learnings more effectively to models that use different, potentially more expensive materials and incorporate more detailed engineering analyses to further refine the design.

Additional Resources:

- Richard G. Budynas and J. Keith Nisbett, *Shigley's Mechanical Engineering Design* (McGraw Hill, 2010) – A respected textbook and reference for mechanical prototyping and engineering.
- Warren C. Young and Richard G. Budynas, *Roark's Formulas for Stress and Strain* (McGraw Hill Professional, 2001) – A useful reference for more detailed mechanical engineering and design.
- Tom Kelley, Jonathan Littman, and Tom Peters, *The Art of Innovation* (Crown Business, 2001) – See chapter 6 for valuable information on prototyping.
- Tim Brown, *Change by Design* (HarperBusiness, 2009) – See chapter 4 for valuable information on prototyping).
- "3D Printing," Wikipedi.org, http://en.wikipedia.org/wiki/3D_printing – While sometimes the information on Wikipedia should be questioned, the entry on 3D Printing is recommended by engineers as being comprehensive and up-to-date.

[i] Ernesto E. Blanco, David Gordon Wilson, Sherondalyn Johnson, and LaTaunynia Flemings, "Cross-Sectional Views," *Design Handbook: Engineering Drawing and Sketching*, http://www.me.umn.edu/courses/me2011/handouts/drawing/blanco-tutorial.html#xsection (January 9, 2014).
[ii] "3D Printing," Wikipedia.org, http://en.wikipedia.org/wiki/3D_printing (January 15, 2014).

